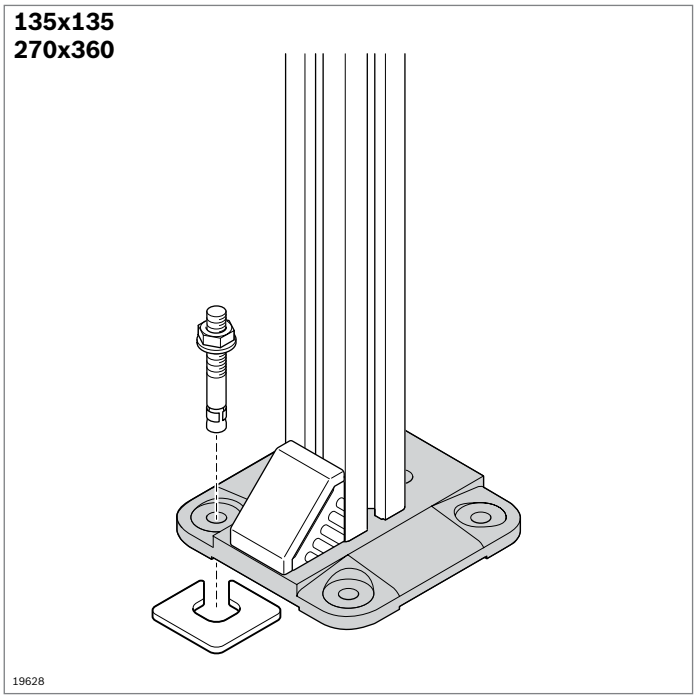

Base plate 135x135, 270x360

- For constructing supports for partition walls and protective walls
- Anchoring with floor dowel

Required accessories:
Bracket (p. 3-17)

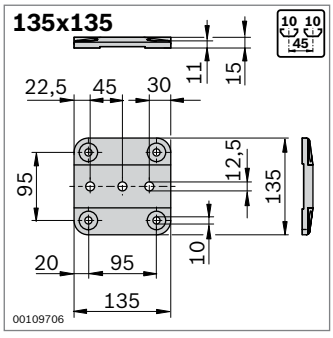

Base plate	ESD	No.
135x135	ESD	**3 842 516 175**
Material:	Die-cast aluminum	

Required accessories:
- Floor dowel **3 842 526 560** (p. 6-12)
- Washer (p. 6-13)

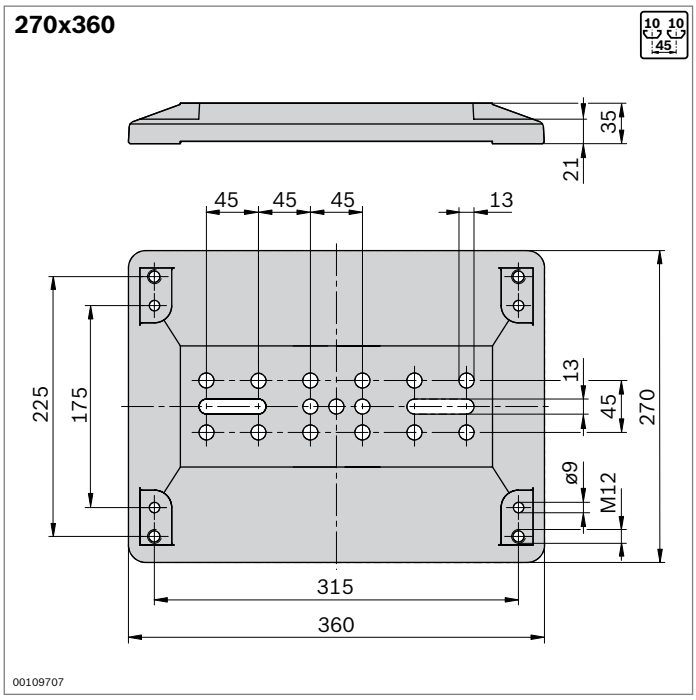

Base plate	No.
270x360	**3 842 514 567**
Material:	gray cast iron, painted black

Required accessories:
- Floor dowel **3 842 540 668** (p. 6-12)
- Washer (p. 6-13)